FAROMOR

Roll-A-Way Curtain

INSTALLATION MANUAL

P.O. Box 279
Shakespeare, ON
N0B 2P0

1-800-960-4002
www.faromor.com

November 2015

Table of Contents

Introduction

The Faromor Roll-A-Way Curtain System gives you the ability to maintain your barn environment for optimum performance regardless of the weather.

The unique design of the Faromor Roll-A-Way System allows the curtain fabric to stay tight in all positions from fully open to fully closed. This reduces premature fabric wear due to water and rodent damage. The tension on the curtain also reduces wind noise during times when the curtain is partially open.

The Faromor Roll-A-Way Curtain System can be installed on both new and existing buildings; and is operated manually with a hand winch, or powered with an electric motor. Powered drive systems have possibility of remote control via manual switch (open-off-close) or automatically with a Faromor thermostat controller.

General Considerations

**Please read the following notes prior to installing the Roll-A-Way Curtain:
(For installation purposes, this manual shows "typical" installation with inside screen and outside wind ropes)

1) Verify framing details are correct, as per page 3, to assure installation will work properly.

2) Read all instructions prior to beginning installation to familiarize yourself with parts and terminology.

3) Confirm what appendixes are required for your specific installation (manual vs automatic, wind ropes vs wind pipes, etc.)

4) Watch for "Faromor Tips" on installation pages for pointers that will assist with installation.

5) Please read final page "Finishing Tips and Touches" before completing installation.

Framing Detail

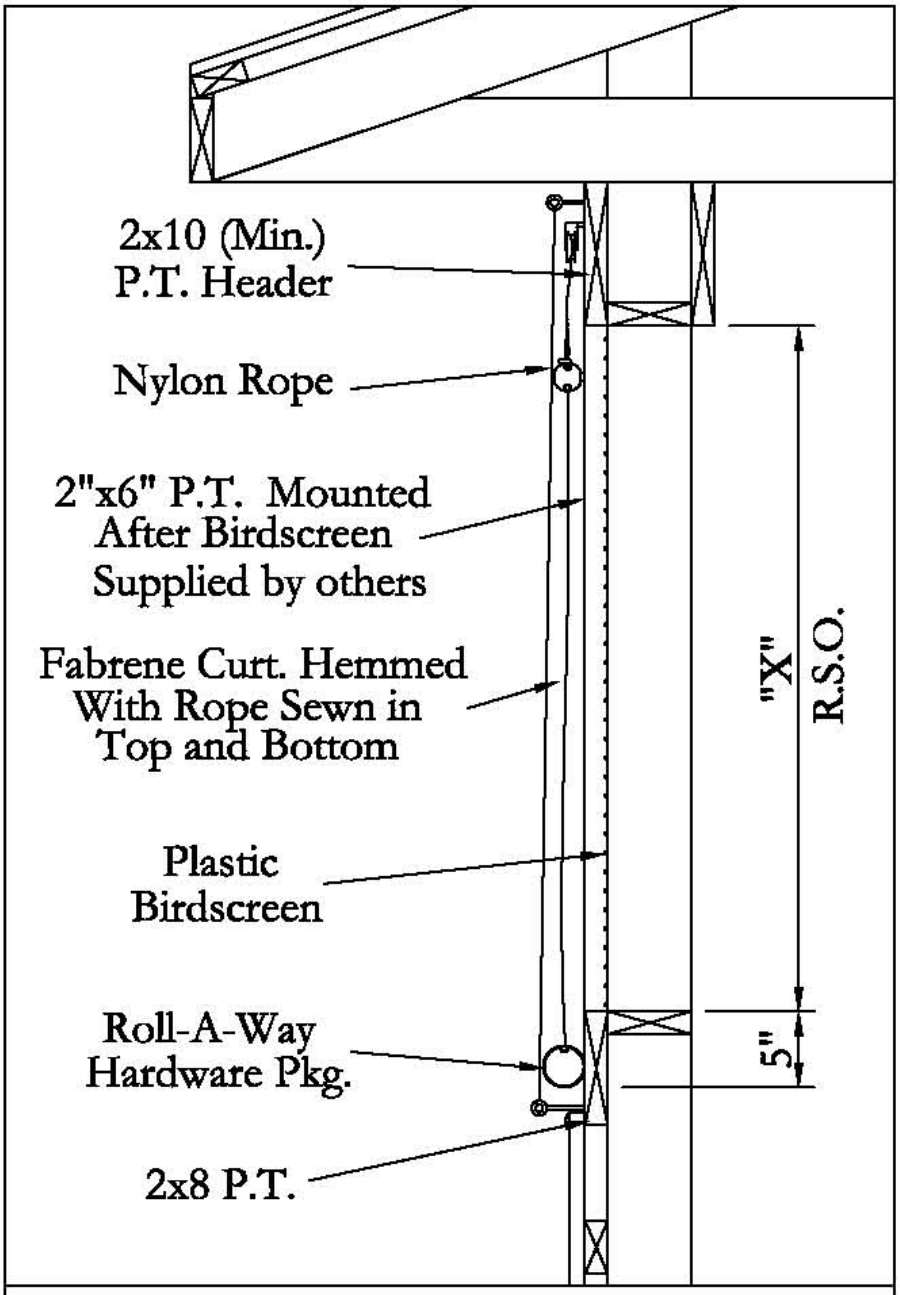

FRAMING OPENING:	
Curtain Size:	Rough Size Opening ("X")
6 FT.	5'-6"
7 FT.	6'-6"
8 FT.	7'-6"
9 FT.	8'-6"
10 FT.	9'-6"

FAROMOR

Parts Listing

Item #	Part #	Description	Picture
1	04-241-03 to 04-241-12	End pocket with track	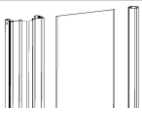
2	04-241-03-01	End pocket “U” bracket	
3	04-241-03-02	End pocket bracket	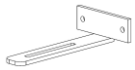
4	04-241-03-03	Tube holder bracket	
5	08-230-01-09	Aluminum tube	
6	04-143-03	3’ curtain material - double rope	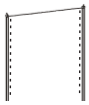
7	ALCURTTRACK	Aluminum track for gear box	
8	MTRACKSEAL	Gray rubber moulding	
9	BSCB5161 and NSHN516FF	5/16” x 1” s.s. carriage bolt and 5/16” s.s. hex nut	
10	BZHLB14X112 and SZWS14112TA	1/4” x 1-1/2” hex head lag and #14 x 1-1/2” pan soc head - zinc	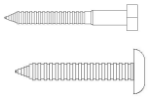
11	04-242-03 to 04-242-12	Outside Plain Pocket	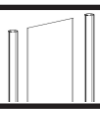
12	04-243-03 to 04-243-12	Inside end pocket (6’ wide x curtain height + 1’)	
13	WGRIP10X1WW	#10 X 1 w/w woodgrip screws	
14	08-230-14-01	S.S. Curtain pulley	
15	MEB38412 MEBG386 MEL5156 MSE551010	Screweyes	
16	08-130-20	Flush mount pulley	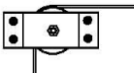

Item #	Part #	Description	Picture
17	08-100-18 or 08-210-24-05	Stainless steel cable - 1/8” or 3/16”	
18	08-200-17-04 or 08-210-24-04	Cable clamp - 1/8” or 3/16”	
19	08-230-01-10	Aluminum lift bar for curtain	
20	08-230-01-08	Tube joiner for 2” tubing	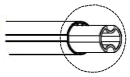
21	04-204-02	3” aluminum tubing	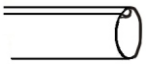
22	04-204-03	Tube joiner for 3” tubing	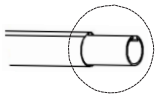
23	R316X34SF	Small head aluminum rivet	
24	09-100-58	Roll-A-Way automatic drive unit	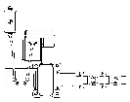
25	08-130-26	Roll-A-Way manual drive unit	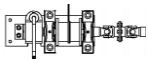
26	08-230-01-02	#5 nylon wind rope	
27	08-230-25-05	Wind pipe centre spacer bracket	
28	ST12SCH40 GALV	½”galvanized wind pipe	
29	08-230-25-02	Top “L” bracket	
30	08-232-25-10	Bottom “Z” bracket	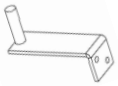
31	08-230-25-06	“Foot” bracket	
32	09-200-58-28	Universal assembly cover	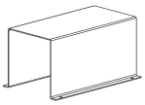

Curtain Pulley Installation

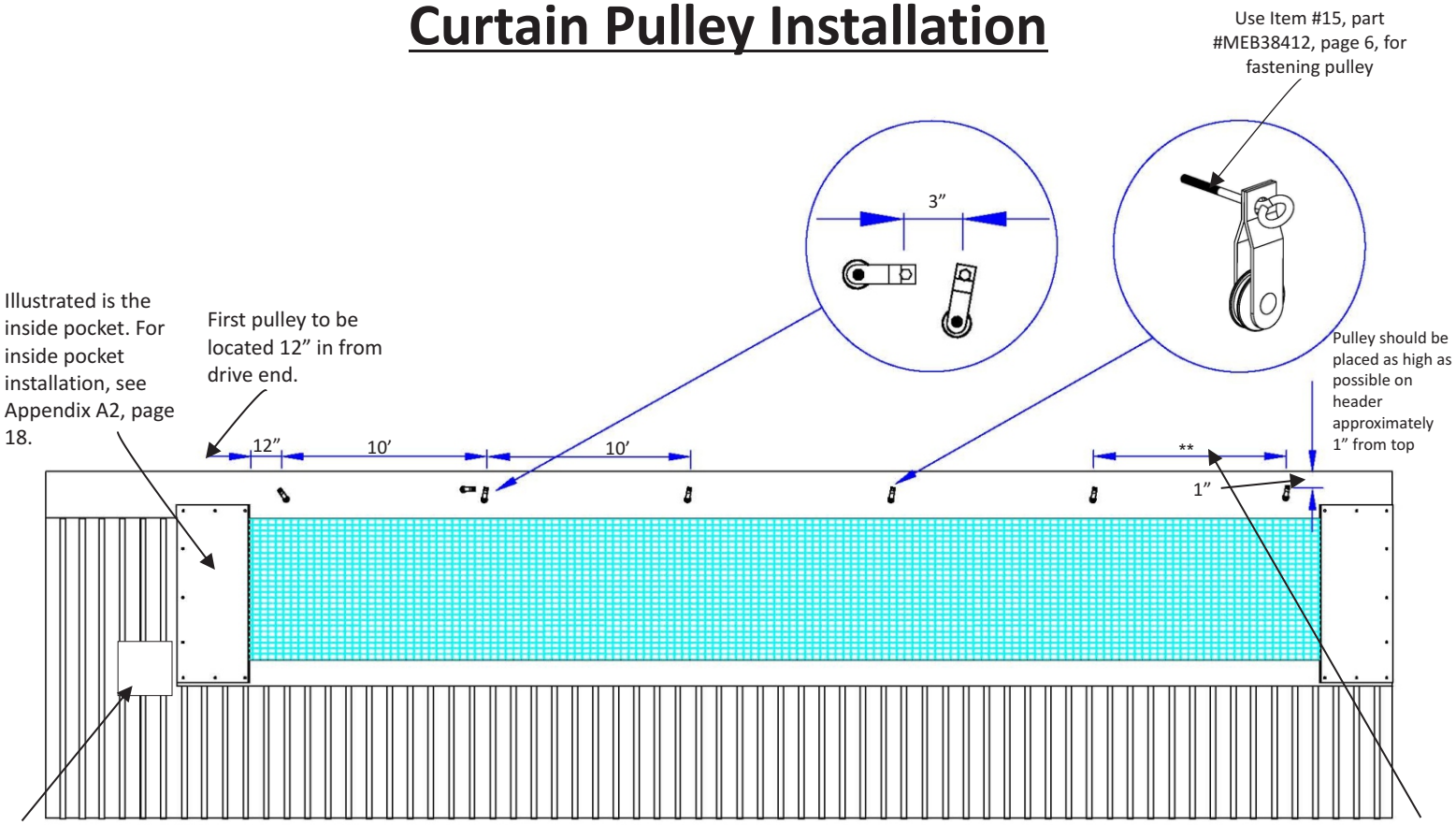

The last pulley should be 12” in from end pocket. The distance between the last two pulleys is variable. **Please refer to page 13 for specific details.

Wind Rope and Main Cable Screweye Installation

**If a wind protection system other than wind ropes is being used, please refer to Appendix C, pg. 26 for installation details.

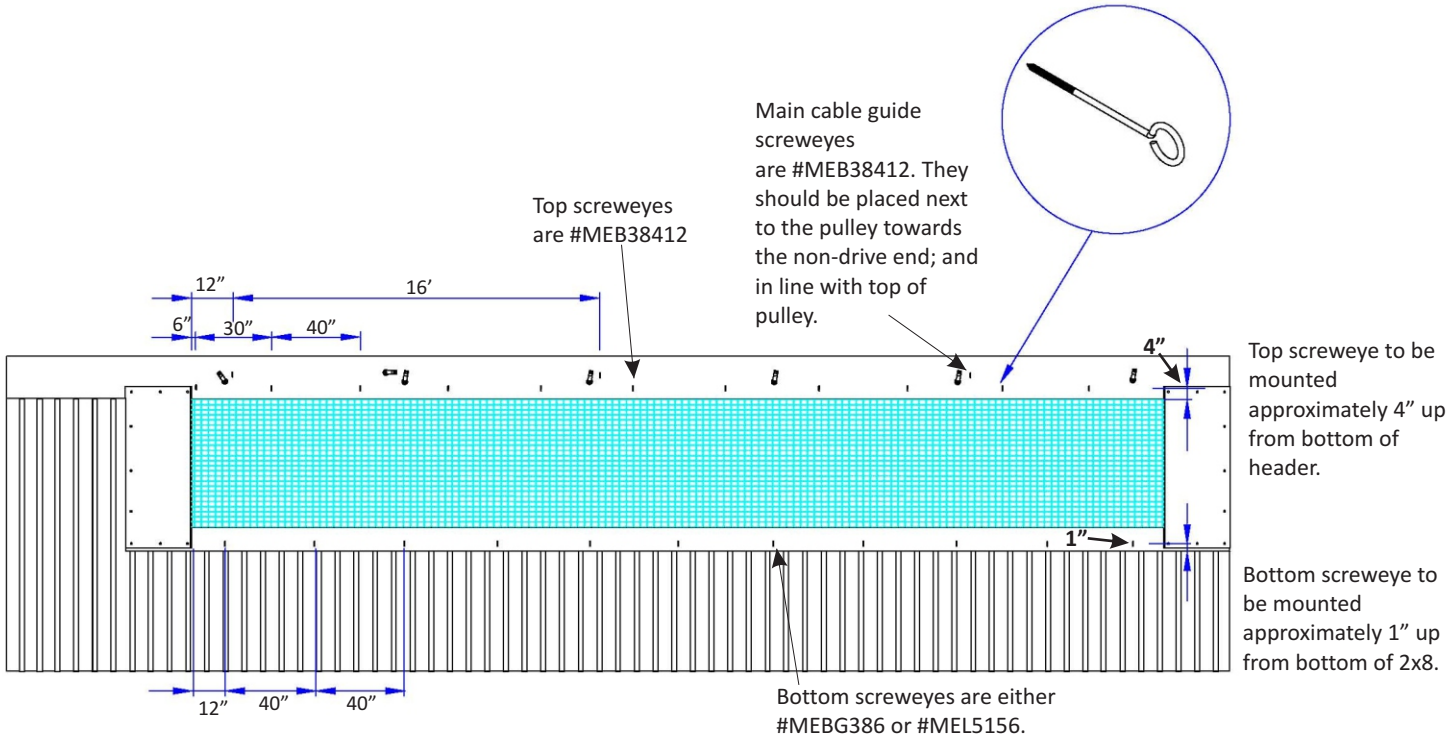

Bottom screweyes should line up with each pulley on top header. Another screweye is then placed halfway between each of the bottom screweyes.

Flush Mount Pulley Installation

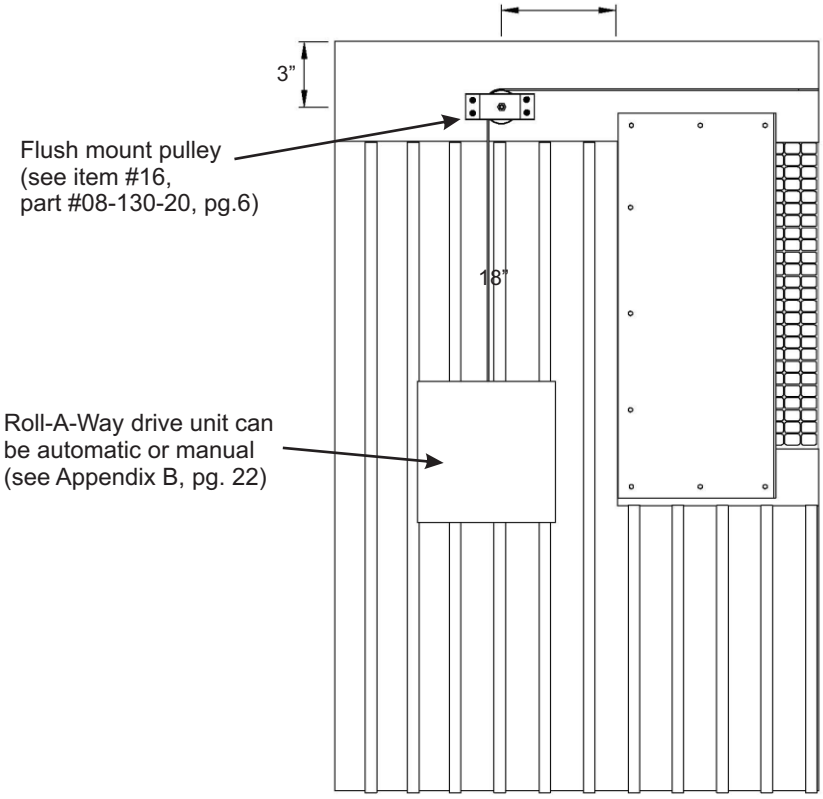

The flush mount pulley must be lined up with the drive unit so that the cable coming off the pulley is directly lined up with cable drum of drive unit.

****Drive unit needs to be installed before moving to next step (see Appendix B1, pg. 22 for drive unit installation)****

Pull-up Cable Installation

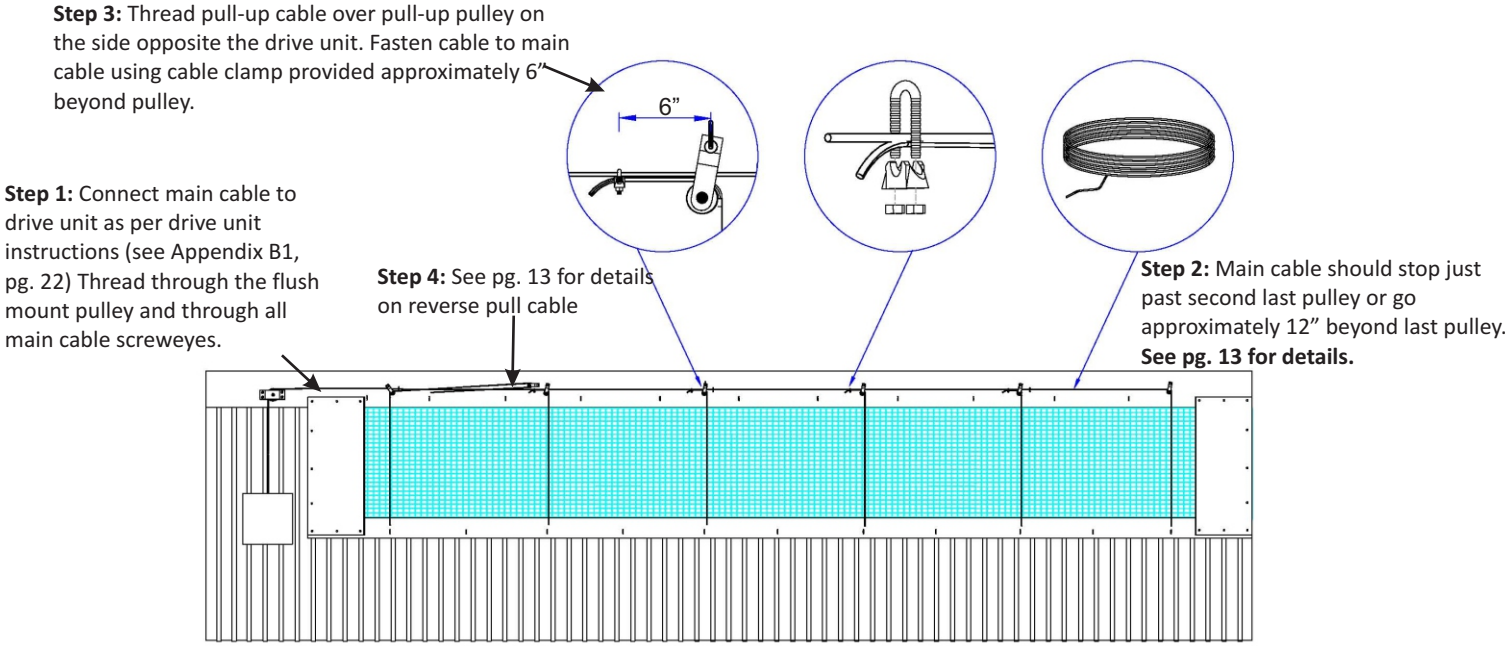

Faromor Tip: Tighten main cable so there is a small amount of tension on cable before pull-up cables are installed. To keep main cable tight during installation, it is recommended that you install a temporary screweye 12” beyond last pull-up pulley or second last pulley, depending on spacing. **(See pg. 13)** Fasten main cable to this screweye using cable clamp. Note: this screweye may need to be removed upon completion of cable installation.

End Pull-up Cable Installation

Reverse Pull-up Cable Drive-end

Reverse pull-up cable should be packed separately and is twice as long as standard pull-up cable.

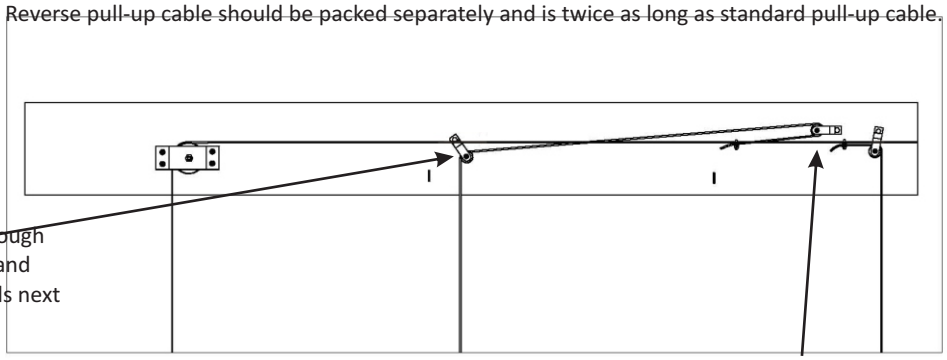

Step 1: Thread cable through pulley - drive end side - and then thread back towards next pulley.

Step 2: Thread the cable around the top of pulley, turn cable back towards drive end and connect to main cable with clamp provided leaving 6” space as per previous cables.

Non-drive End Pull-up Cable

If distance between last two pulleys is 8’ or more, use Option A

If distance between last two pulleys is less than 8’, use Option B

Option A

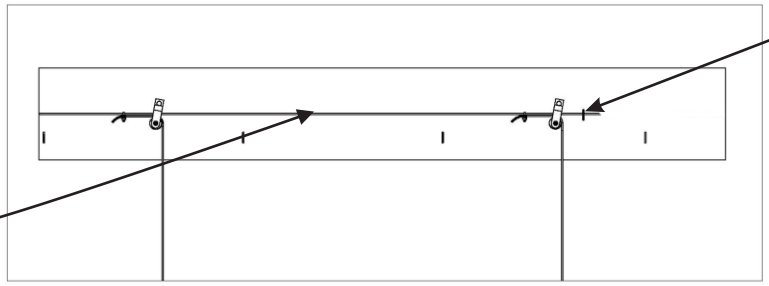

If distance between last pulley and second last pulley is 8’, run main cable 12” past last pulley. Use 1/8” pull-up cable and attach to main cable as per other pull-ups.

Option B

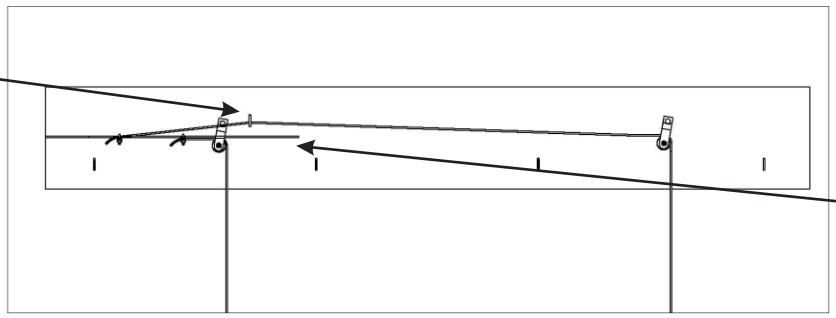

If distance between last two pulleys is less than 8’, run main cable 12” past second last pulley. Use 1/8” cable for last pull-up, thread over pulley, through temporary screweye, and attach to main cable to the left of previous cable clamp.

Top Aluminum Tube and Lift Tab Installation

Step 3: Slide aluminum lift tabs into tube keeping bottom of "L" shape to outside. Line up aluminum tabs with drop cables. Attach cable to tabs, going from back to front, and fasten cable to itself with cable clamp supplied.
**Note: cable clamp nuts should be facing away from the building.

Step 1: Take one length of 2" aluminum tube, slide in accompanying joiner as specified below, fasten tube to joiner, and slide next piece of aluminum tube over joiner. Butt two pieces of aluminum tube together and fasten second piece to joiner. (joiner should be fully enclosed)

Step 2: Drill appropriate sized hole through tube and joiner; fasten tube and joiner together with pop rivets supplied. (rivet head should fit on flat part of aluminum tube)

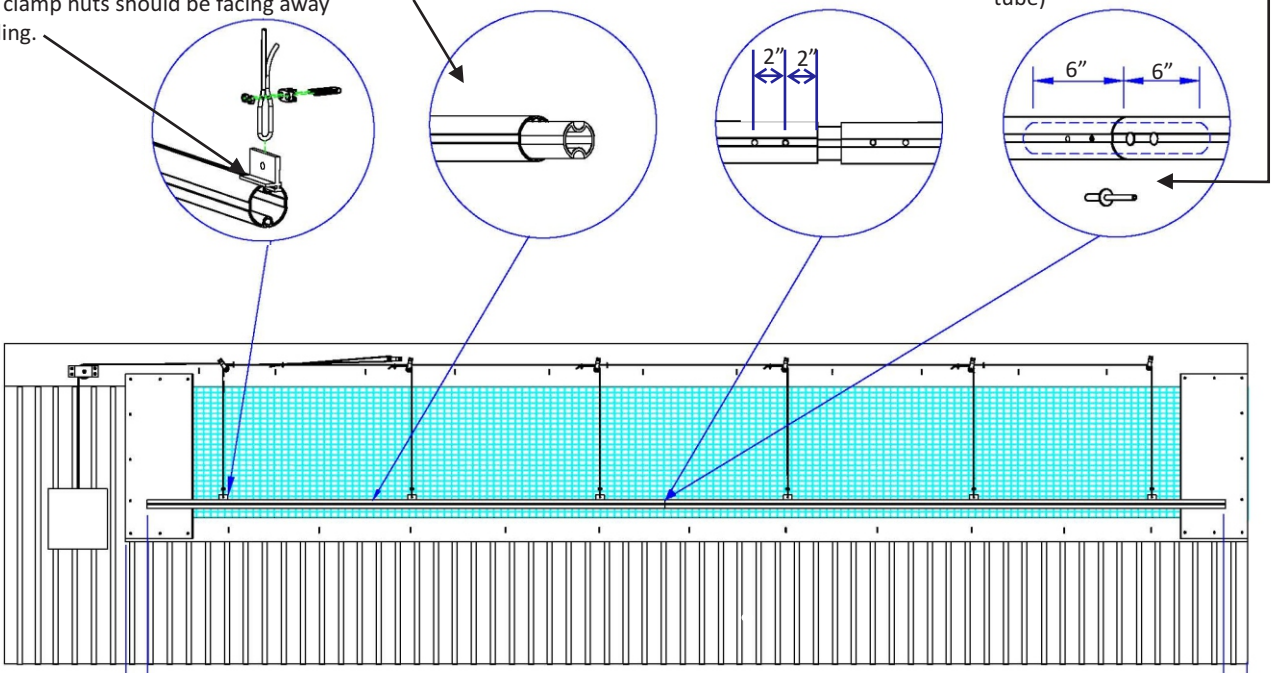

6"

Faromor Tip: To ensure drop cable lengths are even, lay entire length of aluminum pipe onto bottom screweyes. Attach cable to lift tabs and tighten securely. (hold aluminum pipe firmly onto screweyes to avoid lifting of pipe)

6"

Curtain Material and Bottom Tube Installation

Step 1: Sewn into the top and bottom of curtain material is a nylon rope. With top tube raised to convenient height begin sliding rope/curtain material into aluminum tube. Slide curtain to far end of tube so curtain is fully unrolled. If curtain material is too long it can be cut to size.
***See Faromor Tip*

Step 2: Raise curtain to top of opening or convenient working height. Take one length of 3" aluminum tube, slide onto bottom rope/curtain material all the way to the other end. Now insert accompanying joiner into tube and fasten with pop rivet. Slide next piece of aluminum tube onto curtain and butt two pieces of aluminum tube together and fasten second piece to joiner. (joiner should be fully enclosed). Continue in this fashion for entire length of bottom tube.

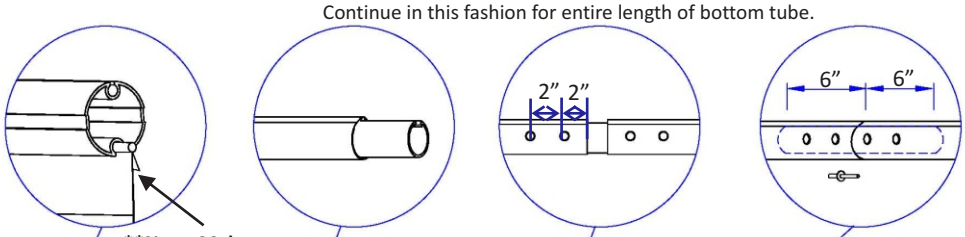

****Note: Make sure small flap faces toward outside wall.**

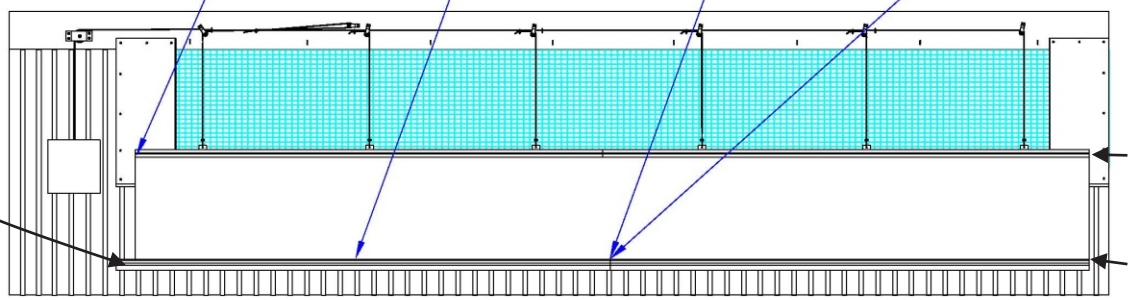

Bottom aluminum tube should extend to outside of end pocket at drive end only.

Bottom tube should be same distance into pocket as top tube at non-drive end.

Faromor Tip:
1) Before sliding rope/curtain into top tube, temporarily fasten top tube to wall at one end to prevent pipe from moving while pulling curtain. **Note: Remove temporary fastener from tube when complete.
2) To prevent curtain from moving while installing bottom tube, fasten rope/curtain to top aluminum tube by screwing self-drilling screw through rope into aluminum at one end.

Wind Rope Installation

At this point, the curtain must be raised to the closed position. This can be done by manually turning the drive unit with main cable attached but not the universal. (See drive unit installation Appendix B1, pg. 22) The top aluminum tube should come completely onto top header but not touching top screweyes. The bottom aluminum tube should be approximately 1" above bottom screweyes. Bottom tube should also be directly in line with centre of drive unit. (See Appendix B1, pg. 22 for the drive unit)

To install wind ropes, attach one end of rope to first top screweye by tying a knot. Thread rope down through first bottom screweye, then back up to next top screweye. Continue in this zig-zag fashion to end of section. ****Note: It is recommended that the rope be installed in approximately 50' sections. Tie off rope at a bottom screweye and start next 50' length on same screweye. (This will allow you to more easily tighten and repair wind rope if necessary)**

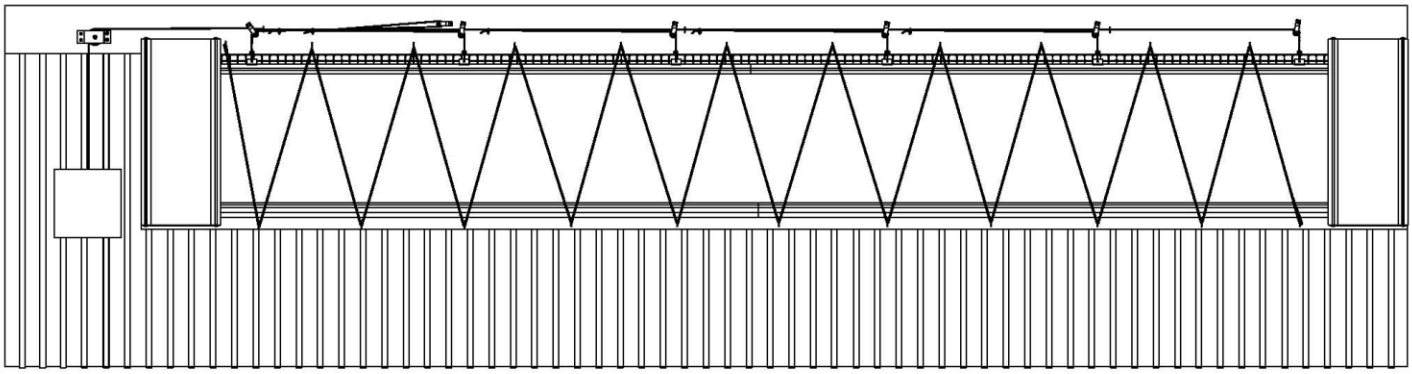

To complete curtain installation, you can now install the outside end pockets (See Appendix A3, pg. 19) and connect bottom tube to drive unit (See Appendix B1, pg. 22).

Appendix A1 - End Pocket Installation

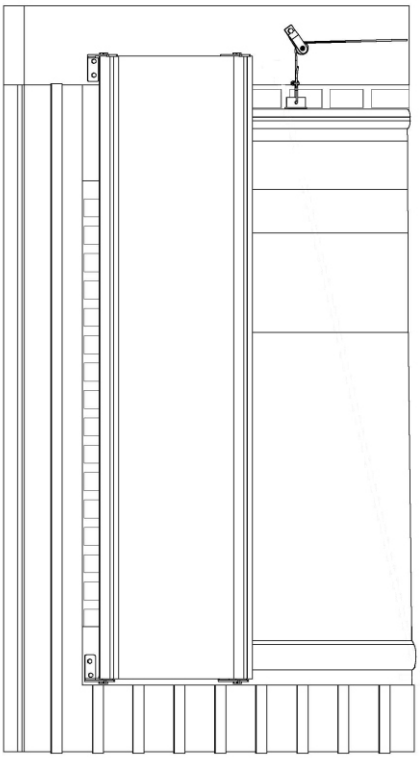

GENERAL

Inside end flap must be installed first.

The height of a pocket is one foot higher than curtain height.

Outside end pockets are determined by curtain styles. There will either be two plain pockets (as shown here); or one plain and one pocket with tracks.

For plain outside end pocket assembly, see pg. 19.

For pockets with tracks, (used with split curtain installations), see Appendix A4, pg. 20

****Please note: For Roll-A-Way curtains and Standard Top Down curtains on a split curtain system, you must use an end pocket with track to match end pocket with track on bottom curtain.**

Appendix A2 - Inside Pockets

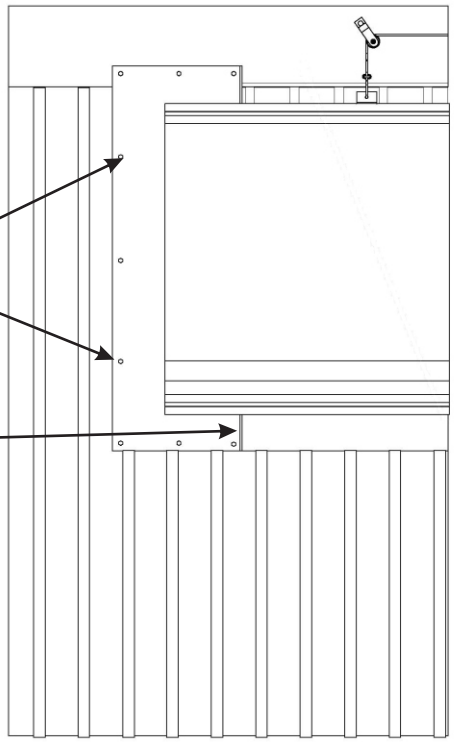

Inside end pockets are the same for any style of curtain.

The inside flap is 6’ wide material that is folded in half to make a 3’ wide inside pocket. The height of the pocket will be one foot longer than the height of your curtain; e.g. 4’ high curtain requires 5’ high end pocket.

The inside flap should be mounted at both ends of the curtain opening. The folded edge is to the interior of the opening. (See diagram)

You must fasten the material to the wall along the top, the outer edge, and the bottom in a “C” pattern. (see diagram)

Appendix A3 - Outside Plain Pocket

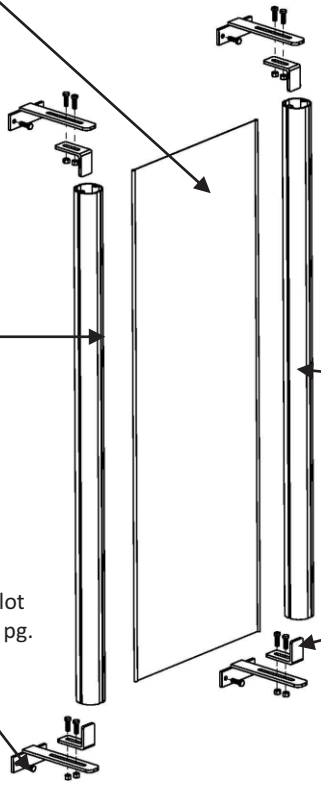

The outside pocket is mounted at the end of the curtain opening.

If your curtain system requires a bottom roll-up gearbox, the plain outside pocket goes to the non-drive end.

The outside pocket will line up directly over top of the inside pocket.

The pocket can be adjusted on the slot bracket as required. Be sure to leave enough room for the rotating bottom tube to operate properly at bottom of opening.

Note: For location of brackets, mount end bracket set to the wall, flush to the edge of curtain opening. Slide curtain into this end track set, stretching fabric tightly to slide into inside tube and bracket set. Use this tube as a guide for mounting second bracket set.

Step 2: Tube holder bracket mounted to slot bracket using carriage bolts provided. (Item #9, pg. 5) ***Note: Nuts should be at the underside of bracket**

Appendix A4 - End Pocket with Track

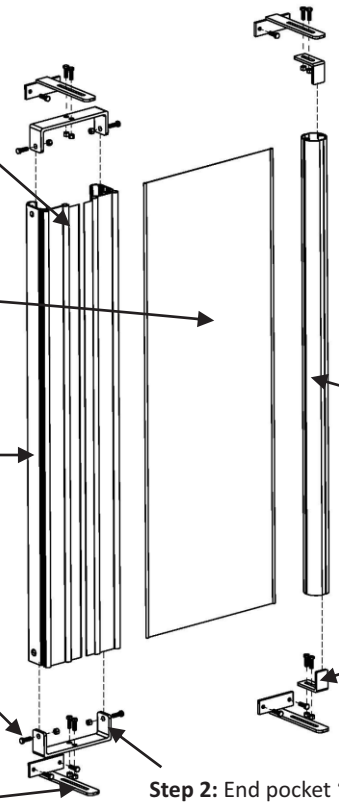

Step 5: Gray rubber moulding slides into each track and overlaps. The convex rubber fingers should overlap for a good seal.

Step 4: 36” wide pocket fabric must slide into both aluminum tubes. You must screw through the rope into aluminum tube to secure using screws provided. (Need to fasten at top only)

Step 3: Track mounted to “U” bracket using 1/4” bolt and nut provided

Step 1: End pocket bracket with slot mounted to wall using Item #10, pg. 5, on both top and bottom.

Step 2: End pocket “U” bracket mounted to slot bracket using carriage bolts provided. *Note: Nuts should be at the underside of bracket

The outside pocket is mounted at the end of the curtain opening.

If your curtain system requires a bottom roll-up gearbox, the plain outside pocket goes to the non-drive end.

The outside pocket will line up directly over top of the inside pocket.

The pocket can be adjusted on the slot bracket as required. Be sure to leave enough room for the rotating bottom tube to operate properly at bottom of opening.

Note: For location of brackets, mount end bracket set to the wall, flush to the edge of curtain opening. Slide curtain into this end track set, stretching fabric tightly to slide into inside tube and bracket set. Use this tube as a guide for mounting second bracket set.

Tube holder bracket mounted to slot bracket using carriage bolts provided

---

Appendix A5 - End pocket Completion

To complete the end pockets, we must now close in the very end of the sections. On either style of end pocket (with or without track) you will have a groove in the aluminum at the outermost edge to allow curtain material to slide in. Use one foot wide curtain material with rope and slide into track or tube.

Make sure curtain material reaches top to bottom, pull material onto framed opening and fasten to wall using plastic nailer strip and woodgrips provided. Trim off excess curtain material as required.

****Note: On drive unit end, curtain material must finish approximately 3” above protruding aluminum tube.**

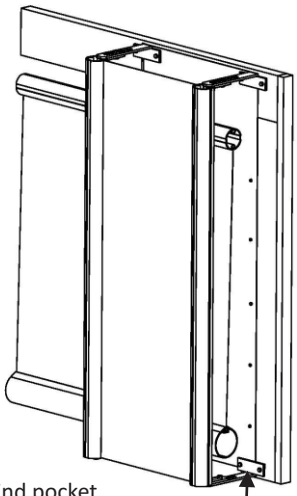

Step 1: End pocket before installation of fabric closure strip.

****Note:** Leave 2” between edge of steel siding and bracket to allow for nailer strip.

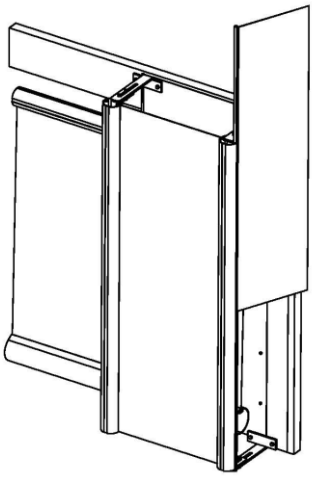

Step 2: Install fabric end closure strip - slide into aluminum tube from top or bottom.

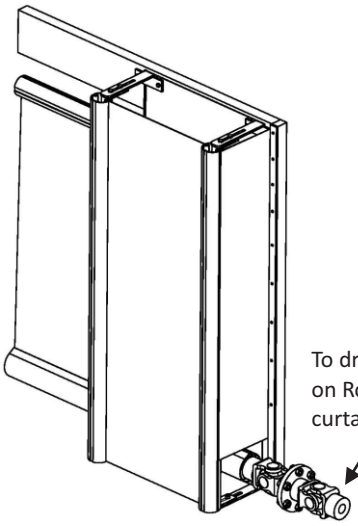

To drive unit on Roll-A-Way curtains only

Step 3: Install plastic or wood nailer strip. (Can be mounted as shown or wrapped to outside to hide strip)

Appendix B1 - Drive Unit Installation

Automatic drive units are supplied in either a right-hand or left-hand drive.
Manual units are interchangeable.
**Illustration is for a right hand drive unit

Drive unit will require approximately 36” long x 36” high blocking area for mounting. (This can be exposed or flat steel covered planking. Bottom of framed blocking area should be 7” below bottom of 2x8 on opening.

Drive unit should be mounted such that the limit switch box is approximately 3” up from bottom of framed area.

From the end of the aluminum tube to edge of cable drum should be 10”.

To ensure proper placement, slide plastic adapter into bottom aluminum tube. The universal joint should be fully extended and in line with tube. Once in place, aluminum tube should be fastened to plastic adapter with a self-tapping screw.

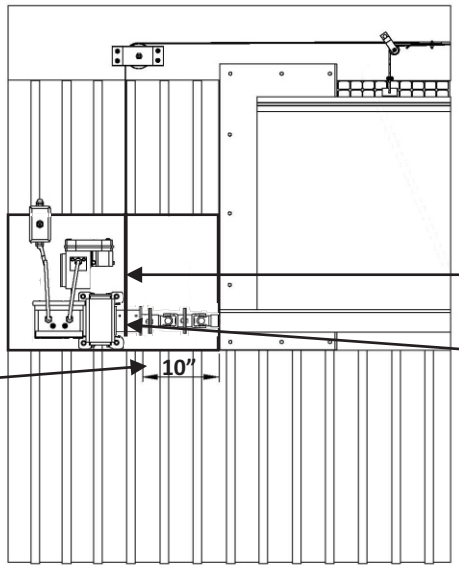

Attach main cable to cable drum by inserting cable into hole in drum and attaching with cable clamp. ***Note:* cable should run back to front around drum.

IMPORTANT!!

Remove limit switch plate in drive unit until curtain is fully installed. Damage to limit switch could occur!
For proper limit switch setting instructions, see page 24.

Faromor Tip: Before operating curtain, take bolts out of universal joint ring. Turn one side of universal a 1/4 of a turn and reconnect. This will help to keep bottom tube from dropping down at start-up.

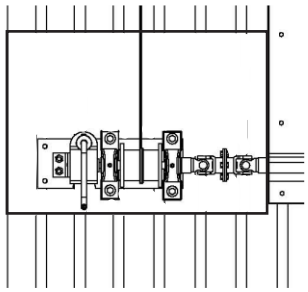

The above illustration is a manual drive unit. It should be connected in the same fashion as the auto-drive unit. Gearbox is operated by manual handle crank that can be operated from

When drive unit is fully installed you must mount the stainless steel drive unit cover. **Note: For automatic drives, there is a right and left-hand. Cover should be mounted such that the hole for main cable and hole over universal are lined up properly. Fasten securely in place through holes provided.

Appendix B2 - Drive Unit Covers

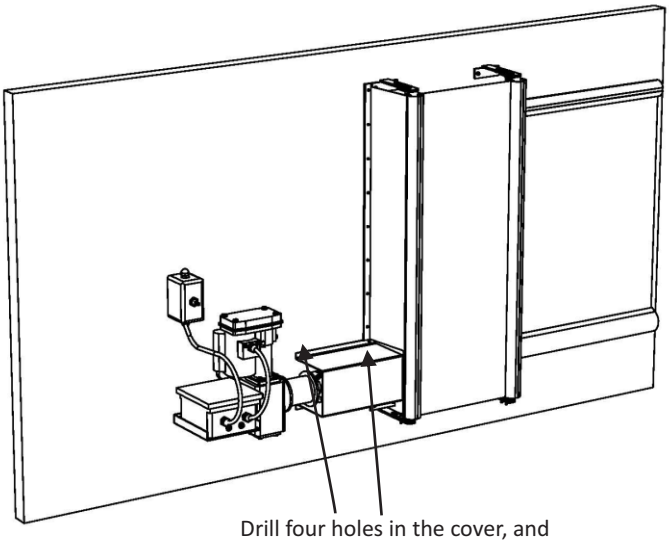

Drill four holes in the cover, and fasten with #12 x 1-1/2” wood screws (this helps keep the universal aligned).

Install drive cover, and fasten with two screws on the top flange.

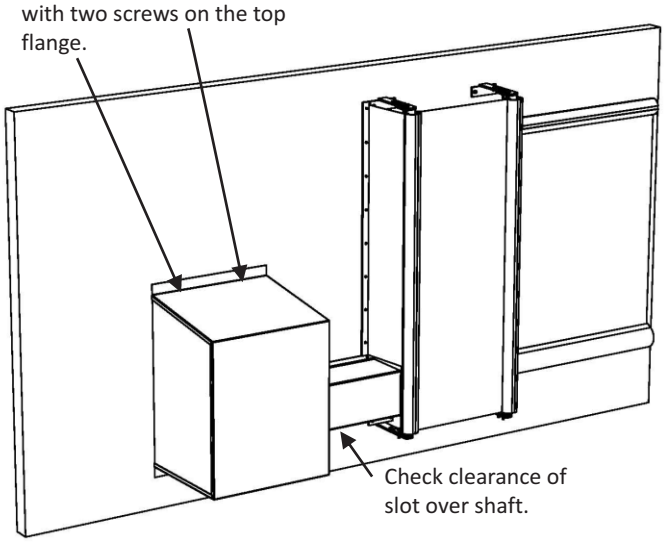

Check clearance of slot over shaft.

Appendix B2 - Drive Unit Covers

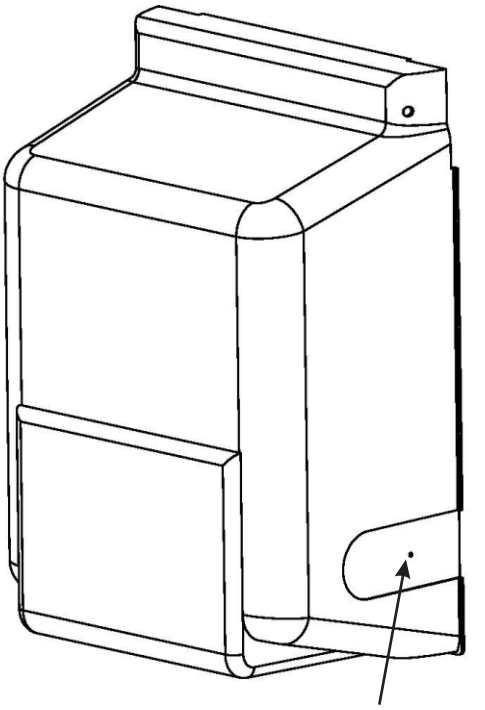

Drill mark on cover.

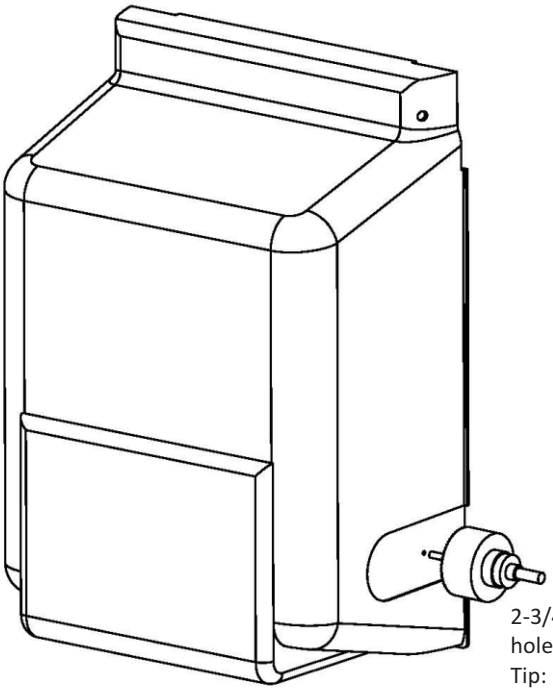

2-3/4” (70mm)
hole saw.
Tip: For smoother
cut, drill in reverse
to cut hole.

Appendix B2 - Drive Unit Covers

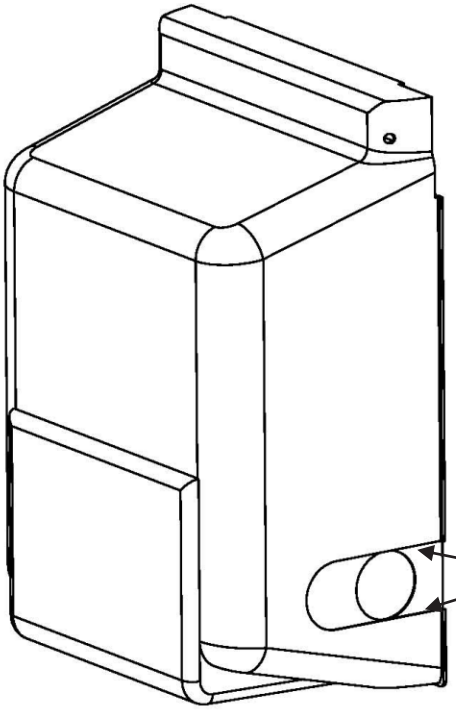

Use hack saw to cut
along these lines.

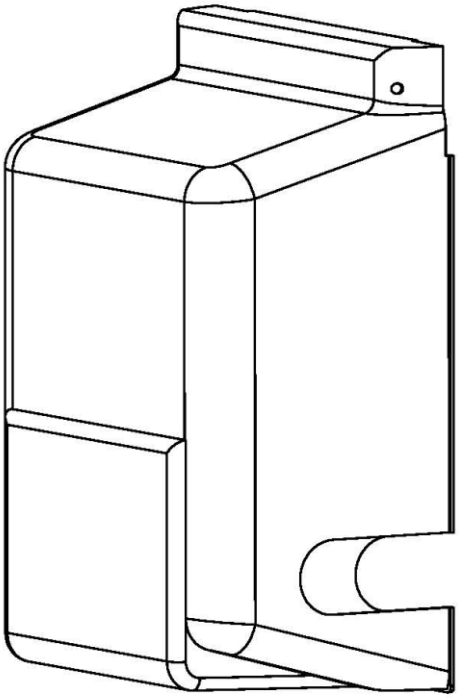

Finished view.

Appendix B2 - Drive Unit Covers

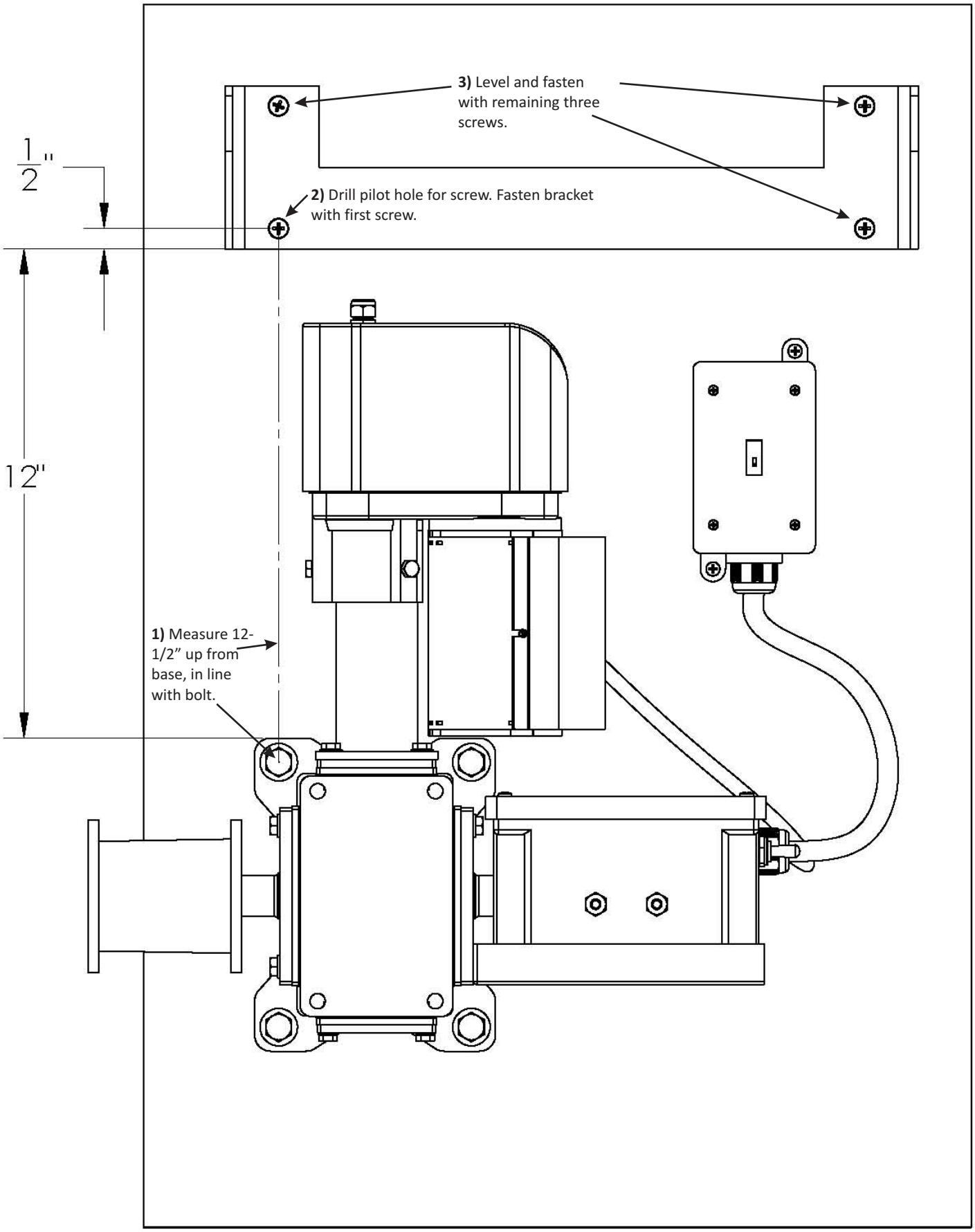

Appendix B2 - Drive Unit Covers

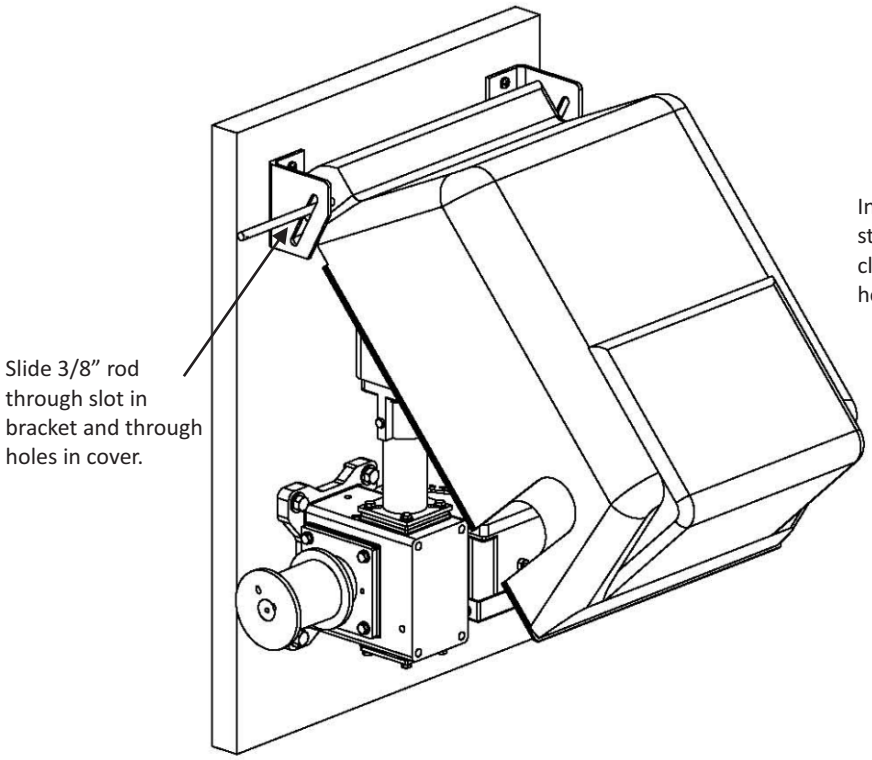

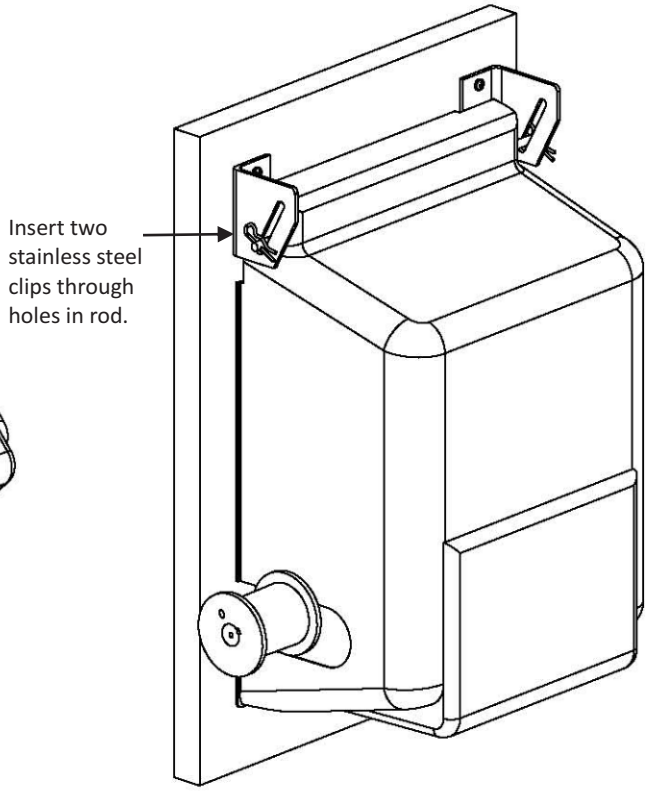

Appendix B2 - Drive Unit Covers

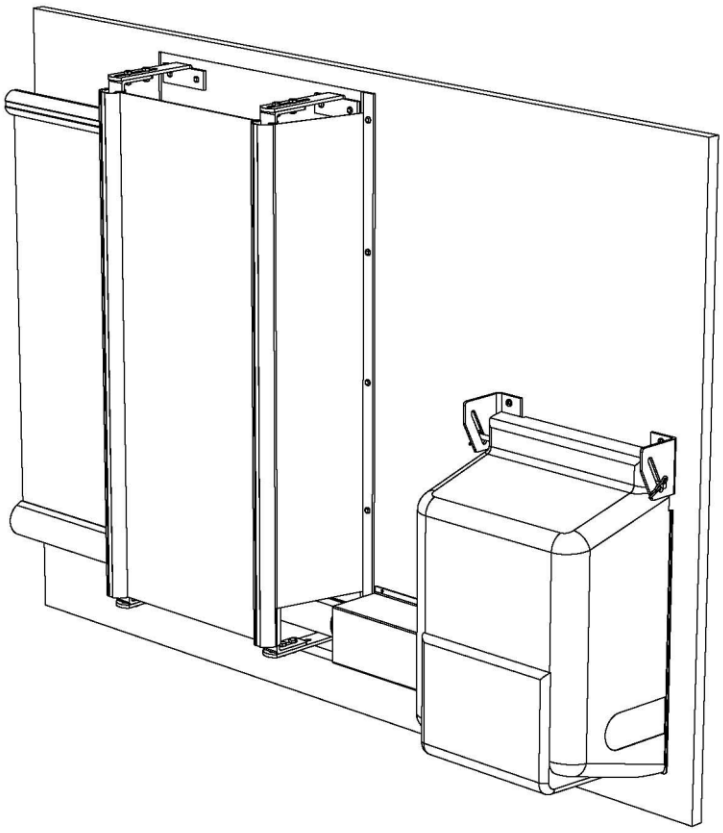

Appendix B3 - Drive Unit Framing Detail

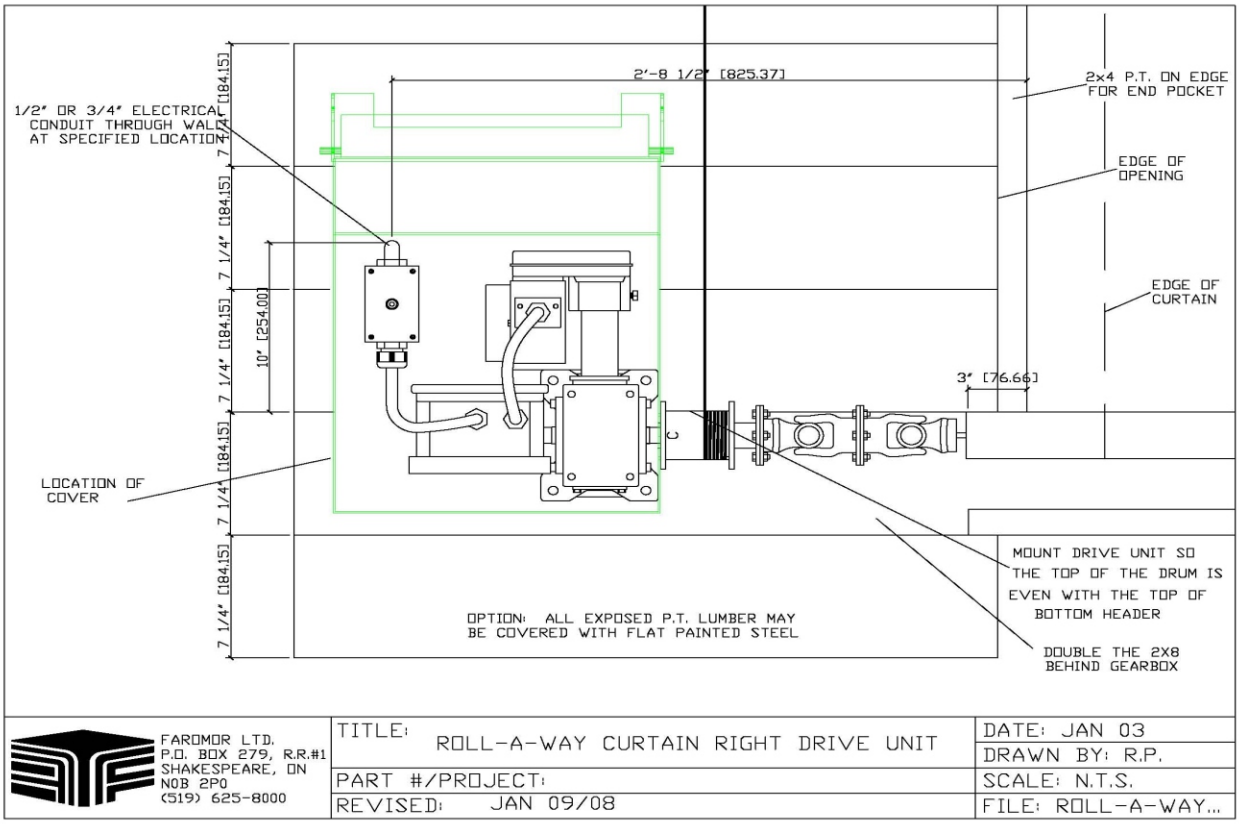

Appendix B4: Limit Switch System

a) Remove adjustment shield 2.
b) Momentarily jog to verify that it is clockwise rotation. Adjusting nut 1 must be traveling towards limit switch A.
c) If unit is rotating in the wrong direction, reverse motor leads or reverse limit switch connections such that wires 1 and 2 connect to terminals 3 and 4 and wires 3 and 4 go to terminals 1 and 2 respectively.

Note:
Depending on right hand or left hand positioning of drive requires opposite rotation.

d) While motor is running in the clockwise direction turn adjusting nut 1 with screwdriver or finger until desired vent location and the motor is stopped.
e) While holding adjusting nut 1, adjust in the counter clockwise direction by repeating step d) using adjusting nut 2 and limit switch b.
f) Replace adjustment shield 2 in reverse position from which you received it from the manufacturer ensuring that the shield edge retains the adjusting nuts in place.
g) Replace cover to avoid dirt and humidity entering limit switch compartment.

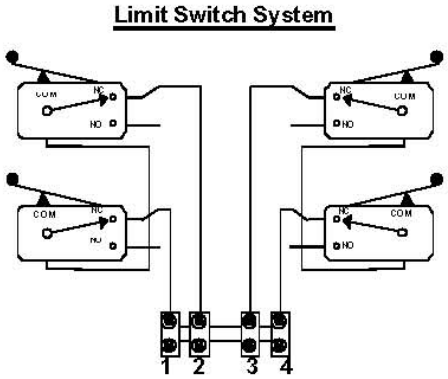

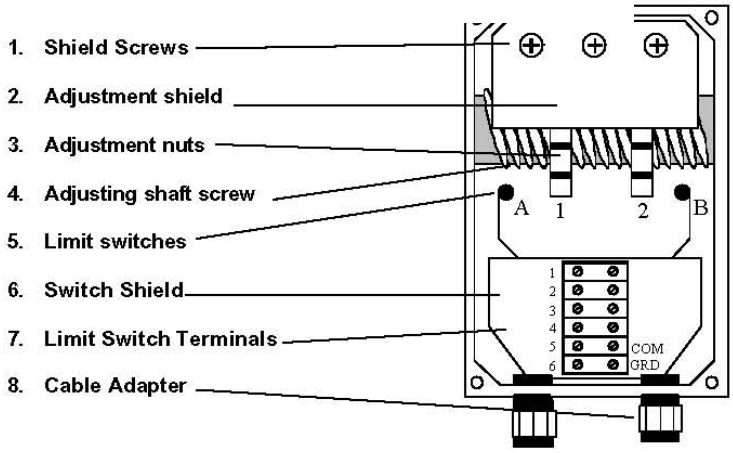

Appendix B5: Threaded Rod Limit Switch Wiring Diagram

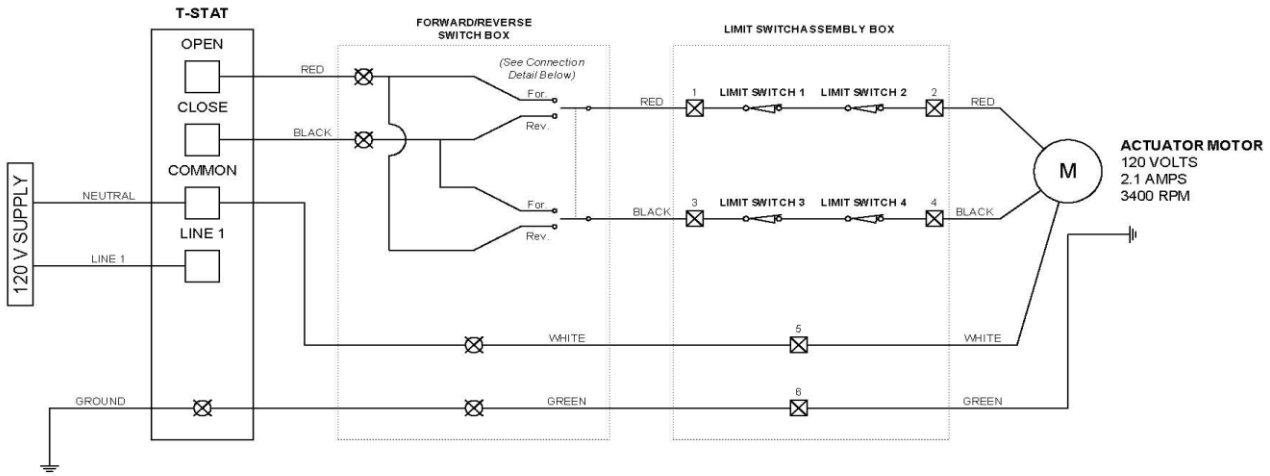

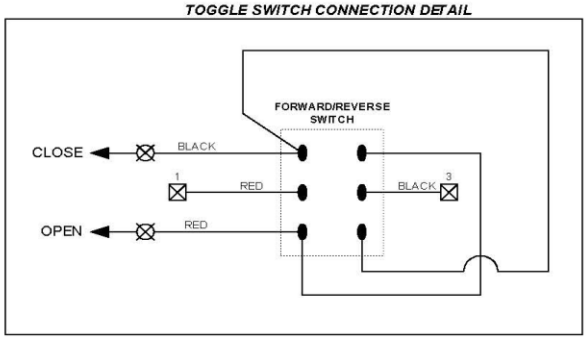

Appendix C1: Wind Protection Systems

Inside Wind Protection System Options

****If installing birdscreen, it should be done first.****

However if using inside wind rope system it can be installed at the same time as outside wind rope on pg. 10

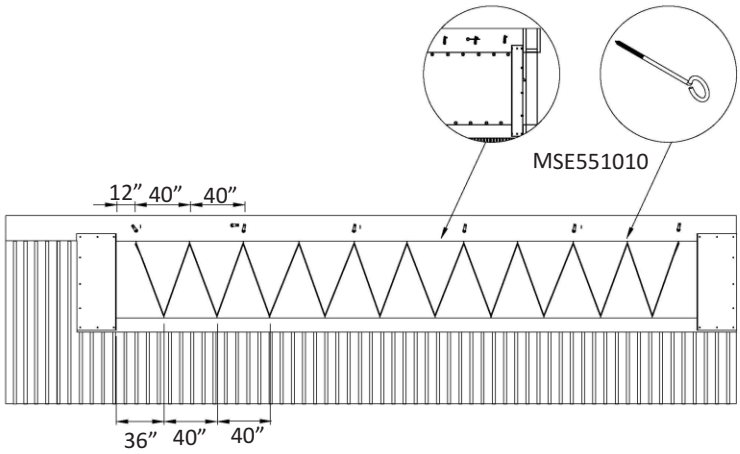

If inside wind rope is being installed use small screweye for both top and bottom. Spacing of inside screweyes should be opposite those on page 10. The inside top screweye should line up underneath each pulley and spaced as per above. Screweyes are to be mounted on underside of header and on top of bottom board.

****Note: It is recommended that the rope be installed in approximately 50’ sections. Tie off rope at a bottom screweye and start next 50’ length on same screweye. (This will allow you to more easily tighten and repair wind rope if necessary)**

Birdscreen option

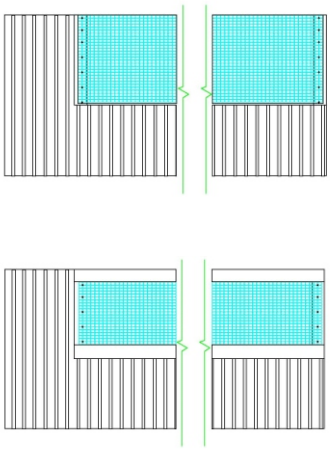

Birdscreen should be installed prior to top header and bottom board and should be installed from one end of opening to the other. To install birdscreen, fasten at one end of opening using galvanized roof nail (not supplied). Stretch roll to next post and fasten with same fasteners and continue until other end of opening. **Note: Keep birdscreen as tight as possible to avoid wrinkles.

Once birdscreen is covering the full opening, you can now install top and bottom boards which will sandwich the birdscreen and help hold it in place.

Appendix C2: Wind Pipe Installation

If curtain system is to have both inside and outside wind pipes, install inside wind pipe after curtain pulley installation on page 9. If system is to have outside wind pipes only, they should be installed as the last step of the overall installation.

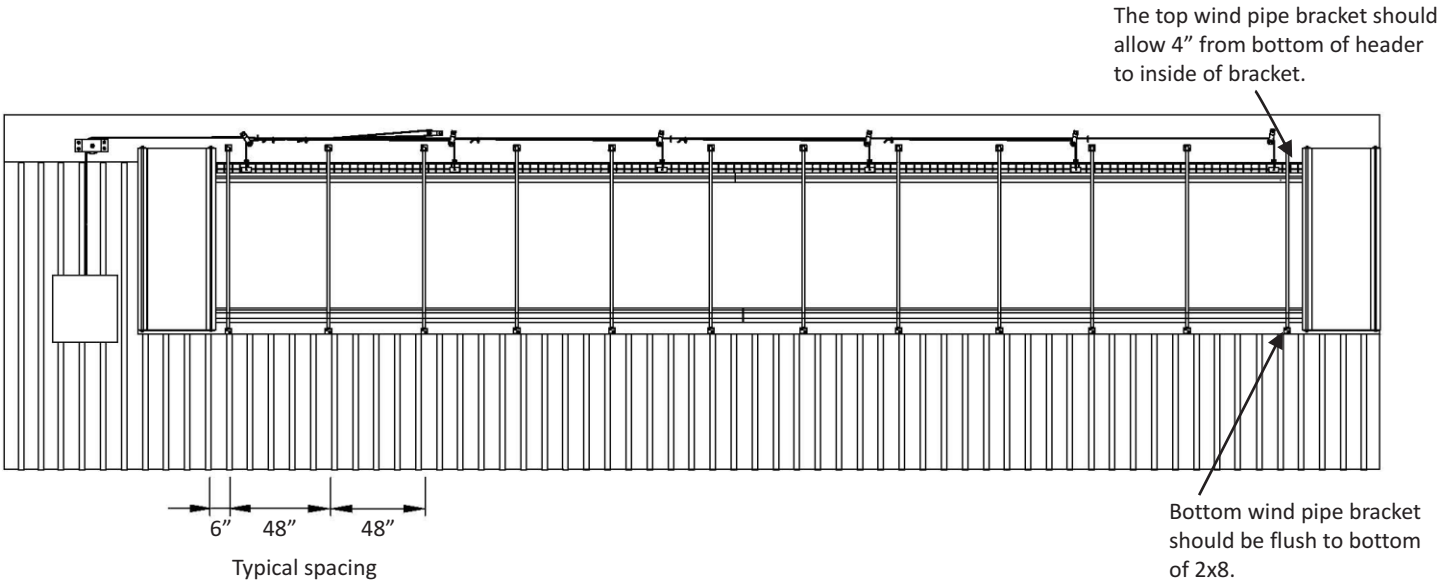

Appendix C3: Wind Pipe Installation

This illustrates a curtain system with wind pipes inside and outside.

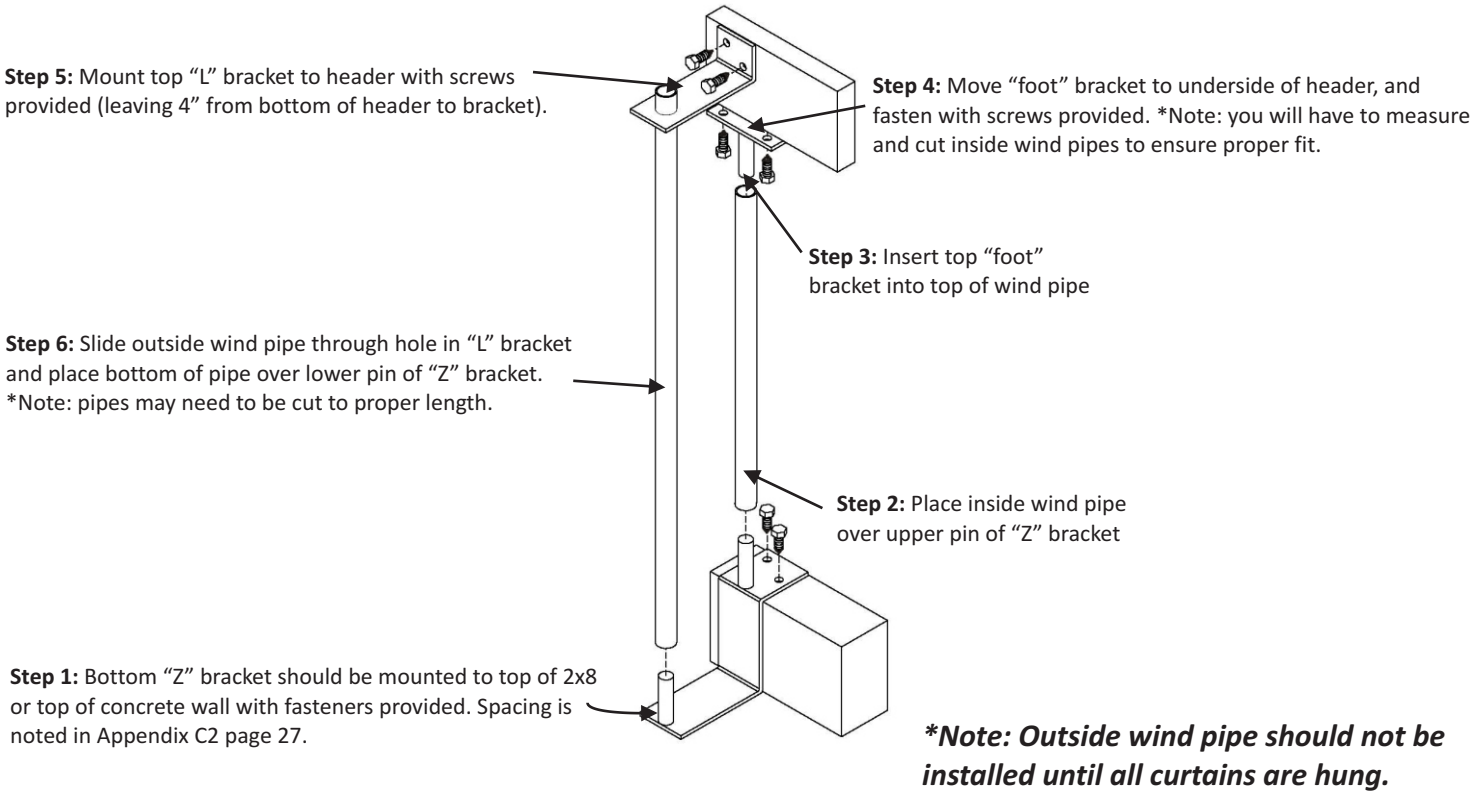

Note: Outside wind pipe should not be installed until all curtains are hung.

Appendix C4: Wind Pipe Installation

This illustrates a curtain system with wind pipes on outside only.

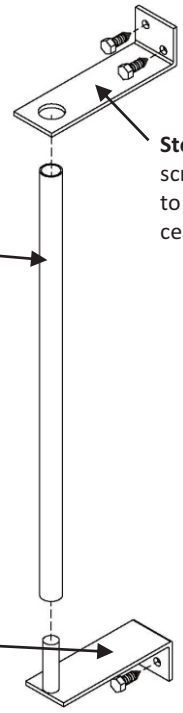

Step 2: Mount top "L" bracket to header with screws provided (leaving 4" from bottom of header to bracket). *Note: Hole in "L" bracket should be centred over pin on bottom bracket.

Step 3: Slide outside wind pipe through hole in top bracket and place bottom of wind pipe over pin on bottom bracket. *Note: wind pipe may need to be cut to ensure proper fit.

Step 1: Fasten non-pin end of bottom bracket to wall (with pin facing up), using fasteners provided. Keep as low as possible on bottom board. *Note: For spacing details, see Appendix C2 - page 27.

Note: Outside wind pipe should not be installed until all curtains are hung.

Appendix C5: Wind Pipe Installation

This illustrates a split curtain system with inside and outside wind pipes.

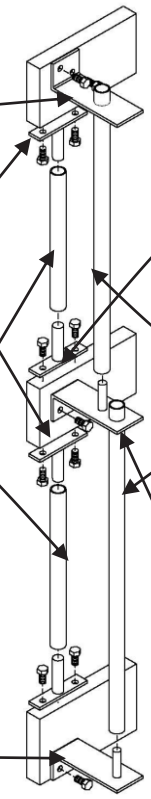

Step 5: Mount top "L" bracket to header with screws provided (leaving 4" from bottom of header to bracket).

Step 4: Insert top "foot" bracket into top of wind pipe. Move foot bracket to underside and fasten with screws provided. **Note:** You will have to measure and cut wind pipe to ensure proper fit.

Step 2: Mount bottom foot bracket for upper inside wind pipe on top of middle board.

Step 6: Slide outside wind pipe through hole in "L" bracket and place bottom of pipe over pin of bottom and middle "L" bracket. ***Note:** pipes may need to be cut to proper length.

Step 3: Place inside wind pipe over foot mount bracket at bottom.

Step 7: Locate spot for middle bracket above bottom track and below upper tube. Attach bracket to wall with pin pointing upwards using screws provided.

Step 1: Bottom "L" bracket should be mounted with pin pointing up and attached to bottom board leaving enough space for aluminum tube (minimum 3") Spacing is noted in Appendix C2, page 27.

Note: Outside wind pipe should not be installed until all curtains are hung.

Finishing Tips and Touches

1) It is very critical that the curtain material be “stretched” after it is installed into the top and bottom aluminum tubes. This can be done by fastening the rope and curtain material to the aluminum tube, both top and bottom, using self tapping screws. Then from the opposite end, pull curtain (not rope) at both top and bottom until all “puckers” have been removed. This will help to avoid “bowing” in the aluminum pipe or creasing of curtain material when curtain system is rolling.

2) Make sure that when the curtain is fully closed, there is no curtain left wrapped onto the bottom tube. This will ensure that no debris gets left in the curtain to cause premature wear and/or uneven rolling of curtain material.

3) Use a small piece of electrical tape to tape off all loose ends of pull-up and main cables. This will help to prevent fraying of cables, which can result in curtain being damaged.

4) Ensure end pockets are proper distance away from wall after installation is complete. They should allow curtain to roll and have some movement in and out from wall, but not allow excessive movement that might be caused by strong winds permitting excessive air leakage.

5) Double check all pull-up pulleys and flush mount pulleys to ensure smooth operation. Check all cable movements and ensure that no cables are getting caught or stuck which will result in curtain not operating properly.

6) For winter operation, it is highly recommended that the universal joint on drive unit, be disconnected. If this is not done, ice build up on curtain during cold weather can get rolled into curtain causing uneven rolling and premature failure.
To disconnect, simply remove bolts and nuts from holes in the universal connecting ring. Curtain will continue to function freely with material folding

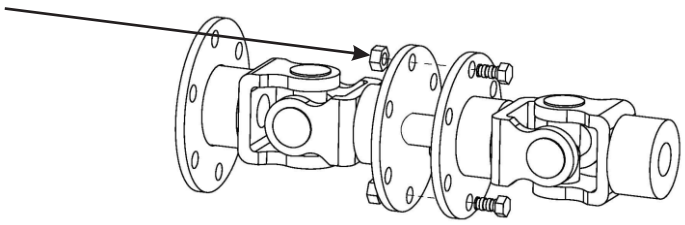

****Important:** When replacing broken bolts use 5/16” - 18 x 3/4” hex cap **Gr. 2** zinc

WARRANTY POLICY

Faromor Ltd. Warranty Policy covers all parts manufactured and supplied by Faromor. Warranty starts from date of initial installation of product and lasts one (1) year.

Faromor will also give full warranty on any installation labour we provide for a period of up to one (1) year from date of installation.

All digital thermostats have a two (2) year full warranty.